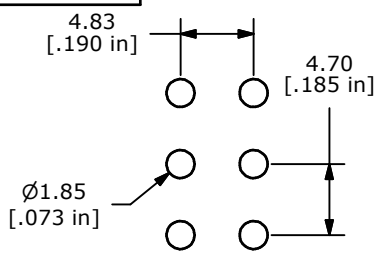

PC MOUNTING

SWITCH FUNCTION		
POS. 1	POS. 2	POS. 3
ON	OFF	ON
2-3, 5-6	OPEN	2-1, 5-4

C

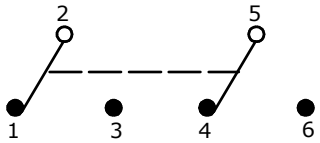

CIRCUIT: DPDT

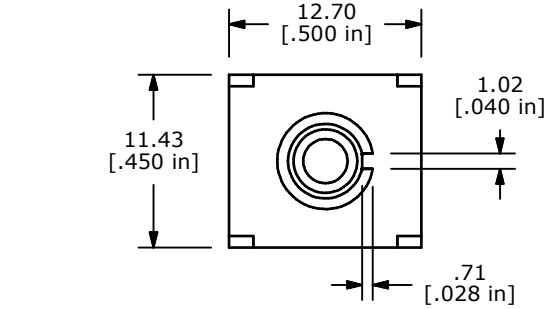

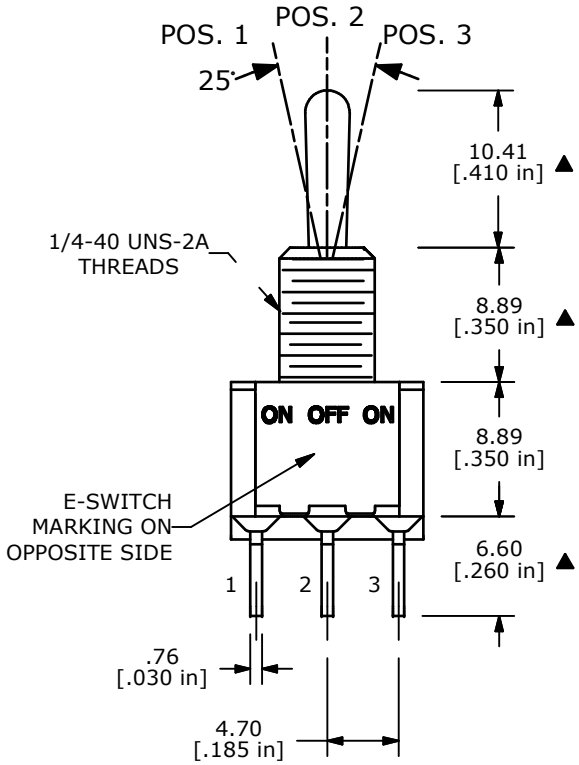

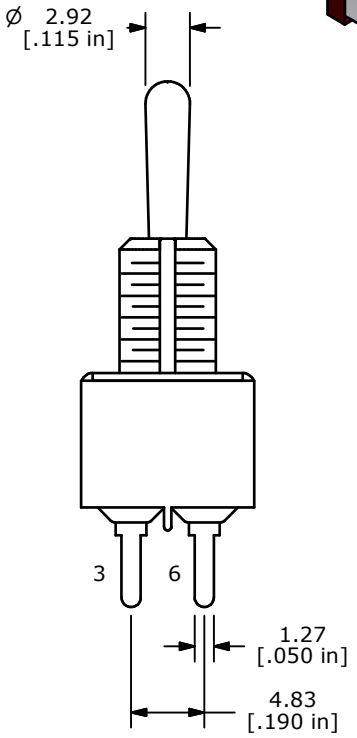

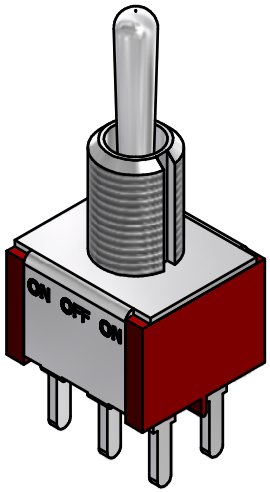

NOTE:
1. ALL DIMENSIONS IN MM [INCH]
2. GENERAL TOLERANCE: X.X=±0.4
   X.XX=±0.25
3. TERMINAL NUMBERS FOR REF ONLY
4. ▲ PLATING MATERIAL: SILVER
5. RATING: 5A W/RESISTIVE LOAD @120VAC OR 28VDC
   2A W/RESISTIVE LOAD @250VAC
6. ELECTRIC LIFE: 40,000 MAKE-AND-BREAK CYCLES
   AT FULL LOAD.
7. INSULATION RESISTANCE: 1,000 MEGA-OHMS MIN
8. DIELECTRIC STRENGTH: 1,000 V RMS @SEA LEVEL.
9. OPERATING TEMP.: -30°C to 85°C
10. ▲ DENOTES CRITICAL PARAMETER.
11. 2002/95/EC (ROHS) COMPLIANT

REV	PCR NO	DESCRIPTION	DATE	BY
C	21006	CORRECT SWITCH FUNCTION TABLE	2/6/13	EBP
B	16173	REVISED AND REDRAWN	6/22/06	CT

THE INFORMATION CONTAINED IN THIS DOCUMENT IS PROPRIETARY TO E-SWITCH AND IS NOT TO BE COPIED OR TRANSFERRED

E-SWITCH®

TITLE 100DP3T1B1M2QE

SCALE	DATE	DR	DWG	REV
2:1	3/10/2000	MM	T123010	C