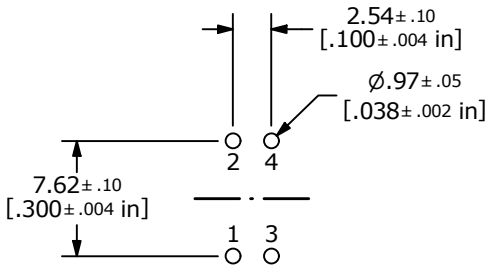

RECOMMENDED
PCB LAYOUT

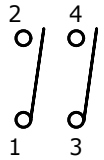

▲ CIRCUIT - 2 POSITION

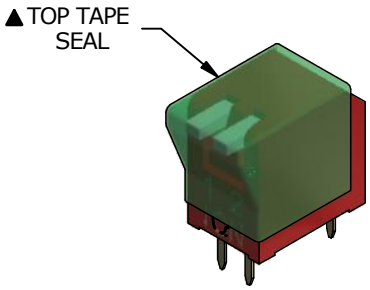

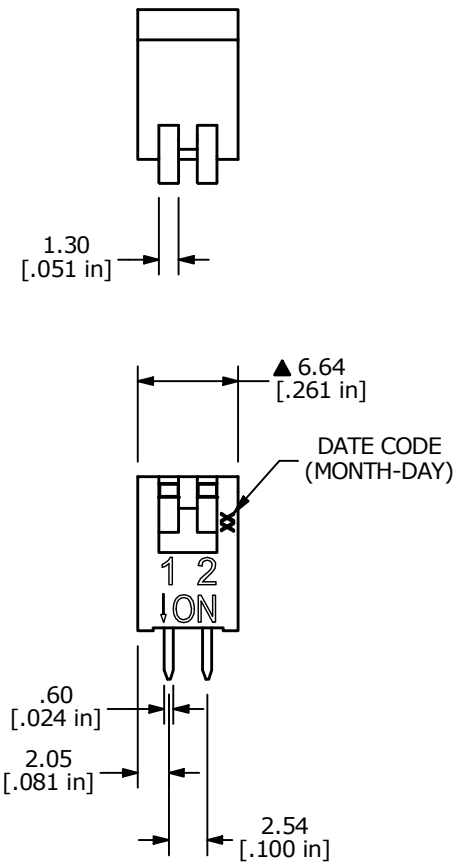

VIEWS SHOWN
WITHOUT TAPE

NOTE:
1. ALL DIMENSIONS IN MM [INCH]
2. GENERAL TOLERANCE: X.X = ±0.4
   X.XX = ±0.25
3. TERMINAL NUMBERS FOR REF ONLY
4. PLATING MATERIAL: GOLD
5. RATING: SWITCH: 25mA @ 24VDC
   CARRY: 100mA @ 50VDC
6. OPERATING LIFE: 2,000 CYCLES, EACH CIRCUIT
7. INSULATION RESISTANCE: 100 MΩ min. @ 500VDC
8. DIELECTRIC STRENGTH: 500 V RMS @SEA LEVEL.
9. OPERATING FORCE: 1,000gf MAX.
10. OPERATING TEMP: -40°C to 85°C
11. CONTACT RESISTANCE: INITAL: 50mΩ TYP. @ 2-4VDC @ 100mA
▲ 12. PART SUPPLIED WITH ALL POLES IN THE "OFF" POSITION.
13. ▲ DENOTES CRITICAL PARAMETER.

REV	ECO NO	DESCRIPTION	DATE	BY
B	ECO-101036	UPDATE PRINT	06/24/22	JS

THE INFORMATION CONTAINED IN THIS DOCUMENT IS PROPRIETARY TO
E-SWITCH AND IS NOT TO BE COPIED OR TRANSFERRED

E-SWITCH®

OBJECT ID 000017033

TITLE KAP1102ET

SCALE	DATE	DR	DWG	REV
2:1	5/15/2018	MW	N411024	B