SHEET 1 OF 1

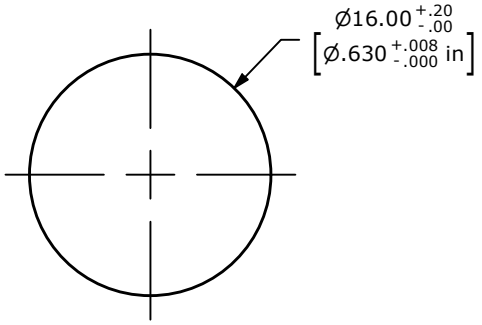

RECOMMENDED PANEL CUTOUT
MAX. PANEL THICKNESS 10mm

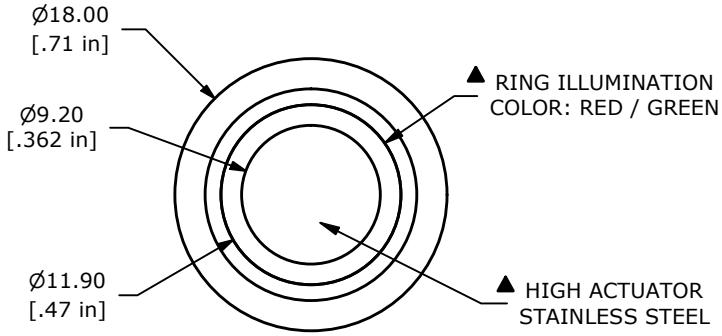



▲ SWITCH FUNCTION	
POS. 1	POS. 2
OFF	(ON)
OPEN	1-2

(ON) = MOMENTARY

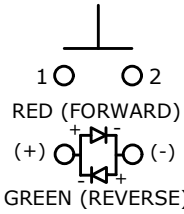

▲ SPST OFF (ON)
CONTACT CONFIGURATION

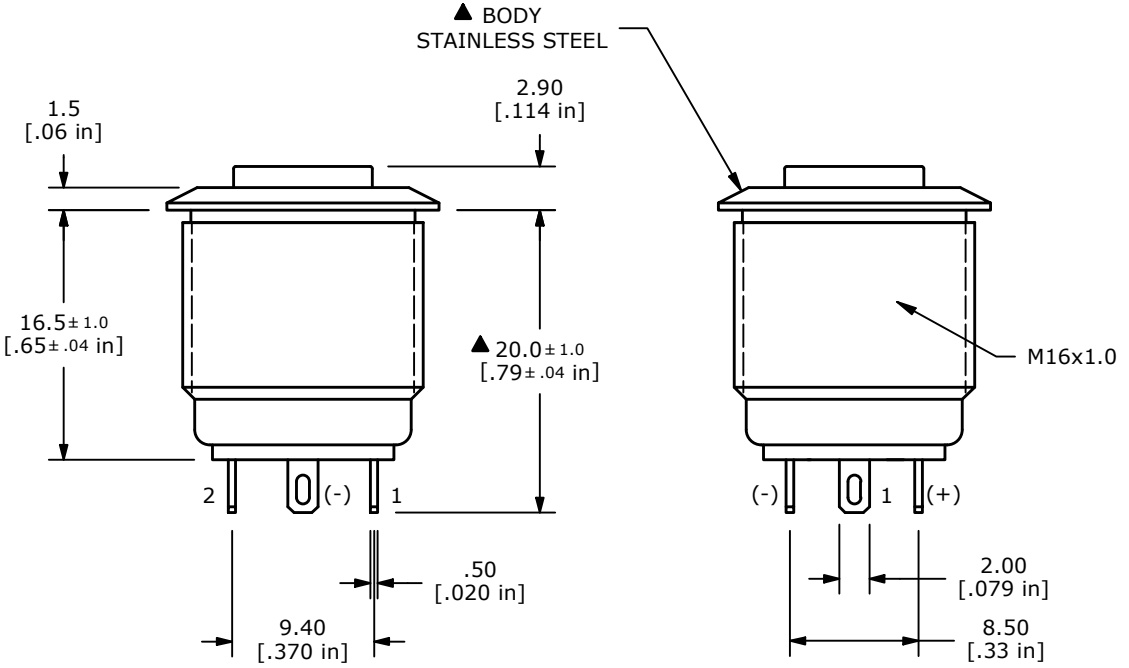

NOTE:
1. ALL DIMENSIONS IN MM [INCH]
2. GENERAL TOLERANCE: X.X = ±0.4
   X.XX = ±0.25
3. TERMINAL NUMBERS FOR REF ONLY
▲4. CONTACT MATERIAL: SILVER
5. RATING: 2A 48VDC
6. ELECTRIC LIFE: 50,000 MAKE-AND-BREAK CYCLES AT FULL LOAD.
7. INSULATION RESISTANCE: 1,000MΩ MIN.
8. DIELECTRIC STRENGTH: 2,000VAC MIN. FOR 1 MINUTE
9. CONTACT RESISTANCE: 50mΩ MAX. @ 1A 12VDC
10. OPERATING TEMP.: -40°C to 85°C
11. TRAVEL: 1.8mm
12. ▲ DENOTES CRITICAL PARAMETER.
▲13. ILLUMINATION VOLTAGE RATING: 1.8V (FORWARD), 2.8V (REVERSE)
14. INGRESS PROTECTION: IP65
▲15. HARDWARE SUPPLIED: O-RING AND HEXNUT (NOT SHOWN)

REV	ECO NO	DESCRIPTION	DATE	BY
B	ECO-103485	PRINT UPDATE	07/03/25	JS

THE INFORMATION CONTAINED IN THIS DOCUMENT IS PROPRIETARY TO
E-SWITCH AND IS NOT TO BE COPIED OR TRANSFERRED

E-SWITCH®

OBJECT ID 000002923

TITLE PV6H240SS-3G1

SCALE	DATE	DR	DWG	REV
2:1	2/19/2016	MW	52-PV6H240SS3G1	B