SHEET 1 OF 1

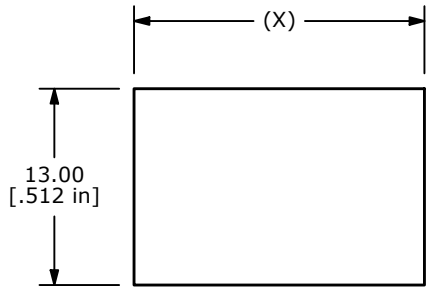

PANEL CUTOUT

PANEL THICKNESS	X
0.75 - 1.25	19.2
1.25 - 2.00	19.4
2.00 - 3.00	19.6

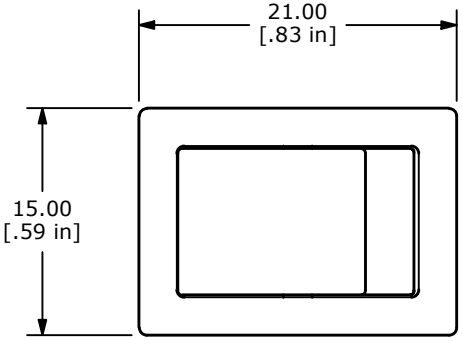

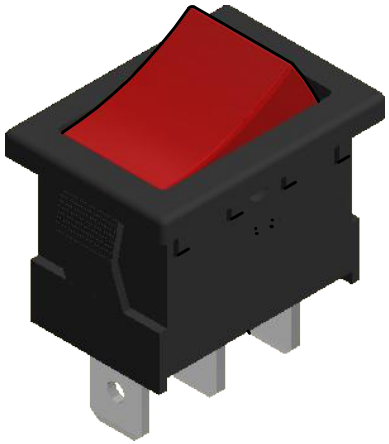

SWITCH FUNCTION	
POS. 1	POS. 2
OFF	ON
OPEN	2-1

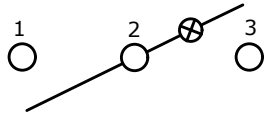

CIRCUIT: SPST
OFF - ON

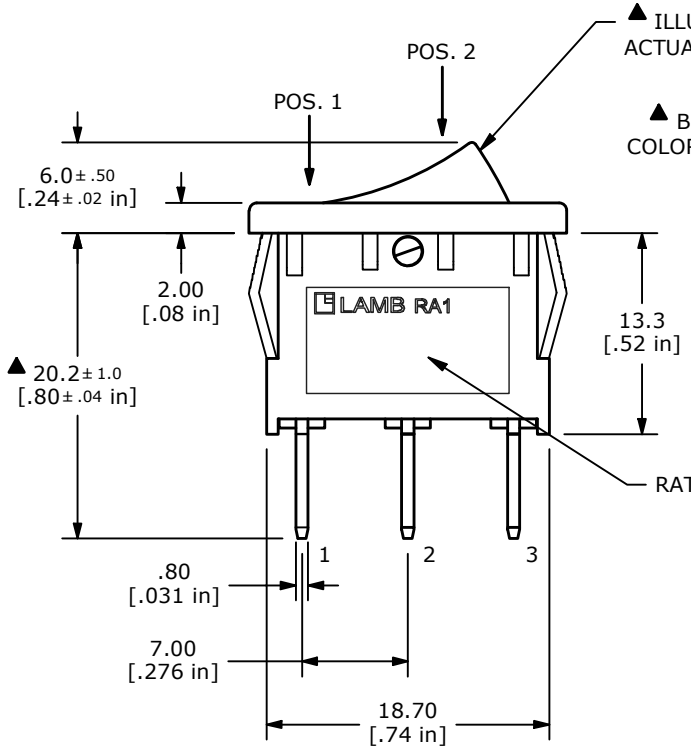

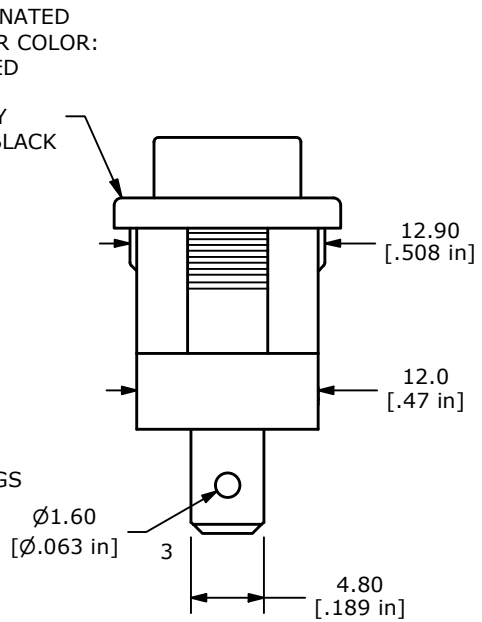

NOTE:
1. DIMENSIONS IN MM [INCH]
2. GENERAL TOLERANCE: X.X = ± 0.4
   X.XX = ± 0.25
3. TERMINAL NUMBERS FOR REF ONLY
4. CONTACT MATERIAL: SILVER
▲ 5. CONTACT RATINGS: 10A @ 125VAC [UR, cUR]
6. CONTACT RESISTANCE: 35mΩ MAX. @ 50VAC
7. INSULATION RESISTANCE: 100MΩ MIN. @ 500VAC
8. DIELECTRIC STRENGTH: 1,500VAC FOR 1 MINUTE
9. ELECTRICAL LIFE: 6,000 CYCLES [UR, cUR]
10. OPERATING TEMPERATURE: -20°C to 105°C [UR, cUR]
11. ▲ DENOTES CRITICAL PARAMETER
▲ 12. LAMP VOLTAGE: 125V
▲ 13. LENS COLOR: RED

REV	ECO NO	DESCRIPTION	DATE	BY
E	ECO-101512	REMOVE 2-3 FROM SWITCH FUNCTION CHART	12/13/22	MR
D	ECO-101272	RA1 SERIES UPDATE	10/11/22	MR
C	ECO-100375	REMOVE VDE/ENEC	01/10/22	JS

THE INFORMATION CONTAINED IN THIS DOCUMENT IS PROPRIETARY TO E-SWITCH AND IS NOT TO BE COPIED OR TRANSFERRED

E-SWITCH®

OBJECT ID 000001377

TITLE RA11131000-116

SCALE	DATE	DR	DWG	REV
2:1	1/14/2010	CAB	38-RA11131000116	E