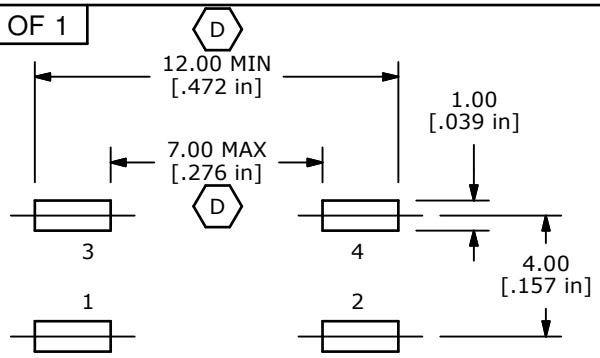

RECOMMENDED P.C.B. LAYOUT

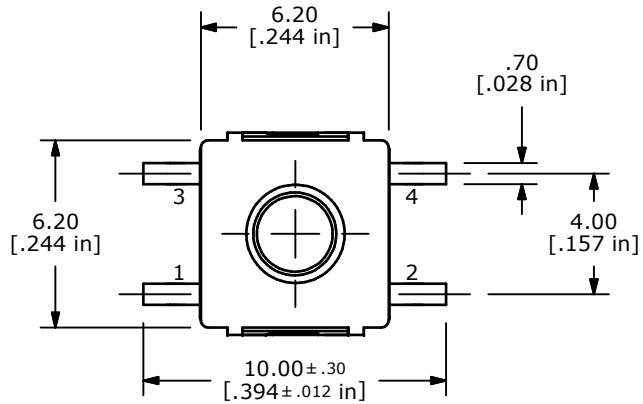

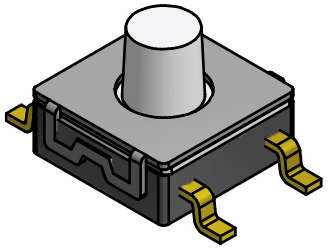

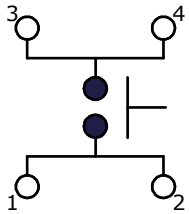

CIRCUIT: SPST

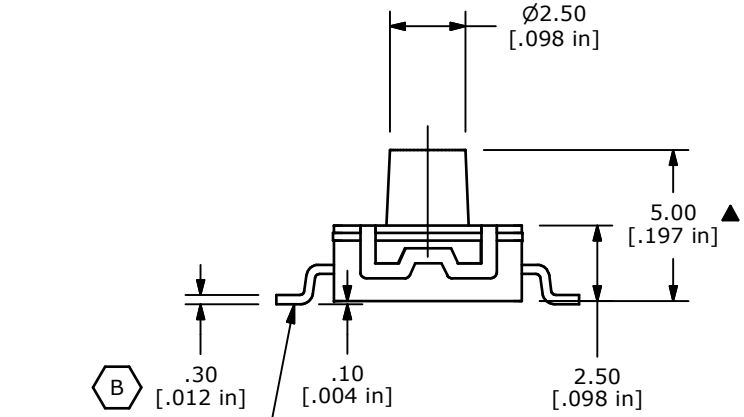

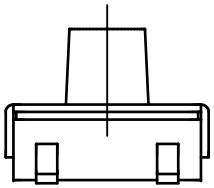

▲TERMINALS TO BE COPLANAR WITHIN 0.10mm MAX.

NOTES:
1. ALL DIMENSIONS IN MM [INCH]
2. GENERAL TOLERANCE: x.x= ±0.4
   x.xx= ±0.25
3. TERM. NOS. FOR REF ONLY
4. RATING: 50 MILLI-AMPS @12VDC
5. TRAVEL: 0.25 +0.2/-0.1MM
6. CONTACT RESISTANCE: 100 mΩ MAX (C)
▲7. OPERATING FORCE: 160 ± 50 GF
8. PACKAGING: TAPE AND REEL, 1000 PIECES PER REEL
9. LIFE CYCLES: 100,000 ACTUATIONS
10. ▲DENOTES CRITICAL PARAMETER
11. 2002/95/EC (ROHS) COMPLIANT
12. OPERATING TEMPERATURE: -20°C TO 70°C (B)
▲13. CONTACT MATERIAL: SILVER (C)

REV	PCR NO	DESCRIPTION	DATE	BY
D	21086	12.0 MIN WAS 12.0, 7.0 MAX WAS 5.8	3/27/13	EBP
C	21024	100mΩ WAS 100Ω, ADD SILVER NOTE	2/12/13	EBP
B	20991	ADD TEMP, ADD TERMINAL THICKNESS	1/29/13	EBP
A	20964	NEW PART RELEASE	1/11/13	rc

THE INFORMATION CONTAINED IN THIS DOCUMENT IS PROPRIETARY TO E-SWITCH AND IS NOT TO BE COPIED OR TRANSFERRED

E-SWITCH

TITLE TL3304BF160QG

SCALE	DATE	DR	DWG	REV
4:1	1/11/2013	rc	P010738	D