TD1350 Series Detector Switch

Specifications

Contact Arrangement: SPST
Contact Rating: 12A, GP/R, 125/250VAC, 50/60Hz, T105, 1E4
3A, GP/R, 125/250VAC, 50/60Hz, T105, 1E4
Contact Resistance: 20mΩ Initial (MAX.)
Insulation Resistance: 100M Ohms @ 500VDC
Dielectric Strength: 1000VAC for 1 minute
Electrical Life: 10,000 Cycles
Mechanical Life: 10,000 Cycles
Travel: 9.0 [0.35 in]
Operating Temperature: 0°C to 105°C
Actuation Force: 200 +/-30gf
Dust/Moisture Protection: IP40
Contact Material: Silver

Features & Benefits

Multiple ratings
Multiple finish options
Multiple terminal types
Snap-in mounted
IP40 ingress protection
UL File Number: E194579
ENEC License ENEC-05429

Part Number Configurator

Series	Terminal Type	Function	Rating Temperature	Actuator Height	Body Color	Actuator Color
TD1350	**1** - QC - 4.8mm **2** - Solder Lug	**A** - Off - (On)	**1** - 12A 125/250VAC T105 **2** - 3A 125/250VAC T105	**A** - 10mm	**B** - Black **W** - White	**B** - Black **W** - White

Specifications subject to change without notice 3/12/2026

NOTES:
( ) Denotes function is momentary

TD1350 Series Detector Switch - Body Dimensions

Quick Connect 4.8mm

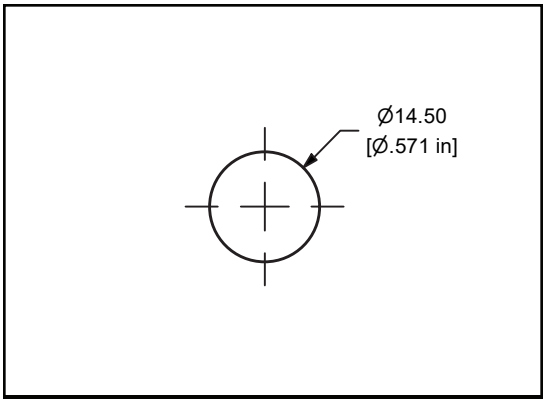

Panel Cutout

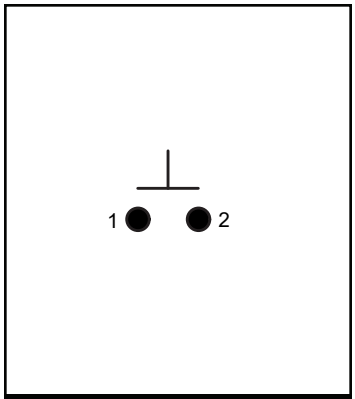

Schematic

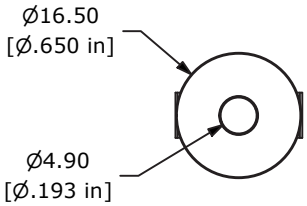

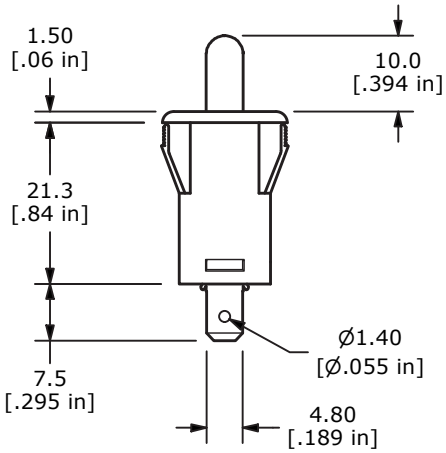

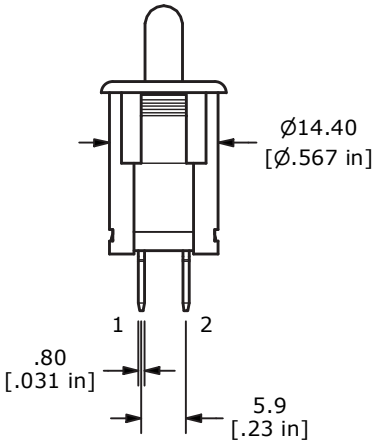

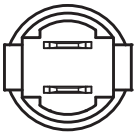

TD1350 Series Detector Switch - Body Dimensions

Solder Lug

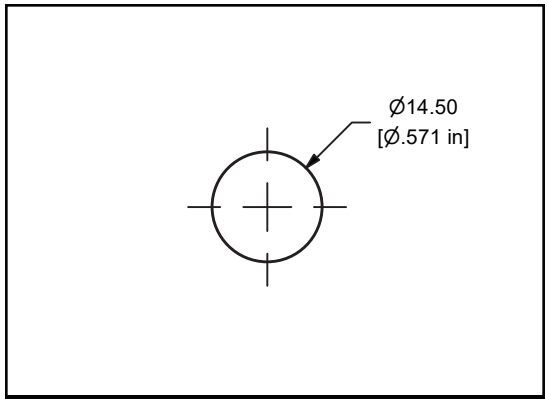

Panel Cutout

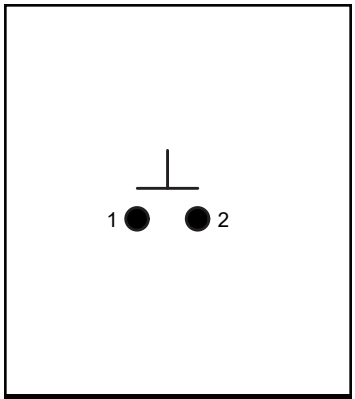
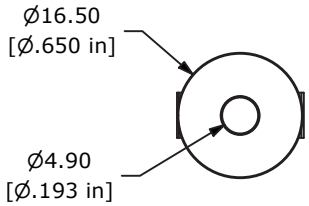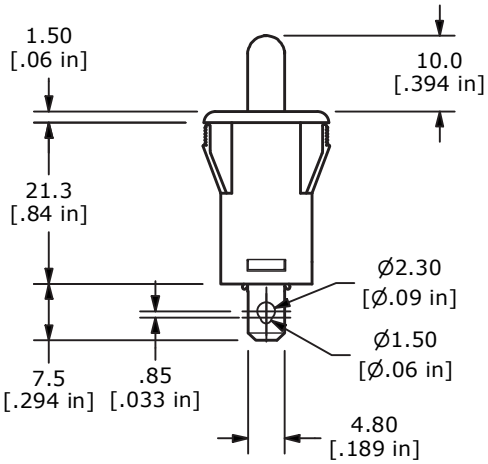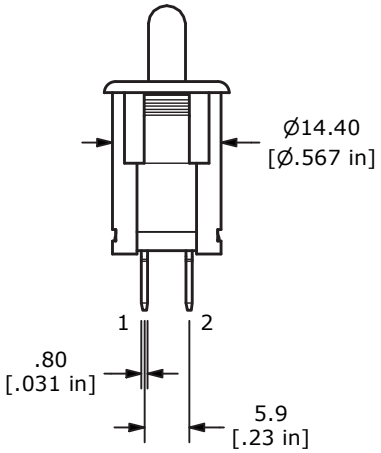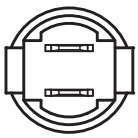
Schematic